Bracket—Static Analysis

Introduction

This tutorial model summarizes the fundamentals to model structural mechanics problems and how to apply them in COMSOL Multiphysics and the Structural Mechanics Module. This includes creating a geometry as well as defining material properties and boundary constraints and conditions. After the solution is computed, you will learn how to analyze results and check the reaction forces.

Model Definition

The model used in this guide is an assembly of a bracket and its mounting bolts, which are all made of steel. This type of bracket can be used to install an actuator that is mounted on a pin placed between the two holes in the bracket arms. The geometry is shown in Figure 1.

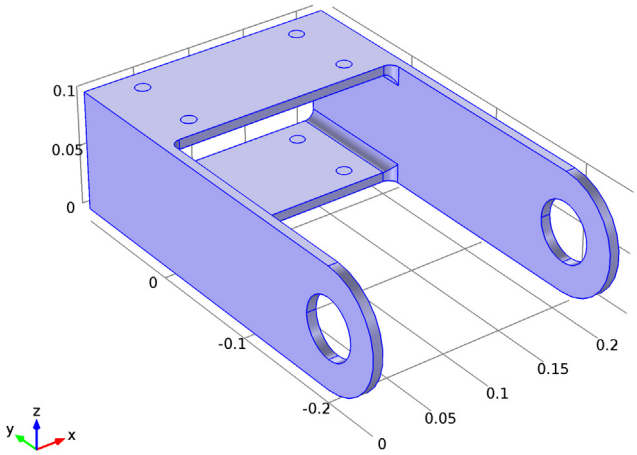

Figure 1: Bracket geometry.

In this analysis, the mounting bolts are assumed to be fixed and securely bonded to the bracket. To model the external load from the pin, specify a surface load p with a sinusoidal distribution on the inner surfaces of the two holes:

$$p = P_0 \sin(\alpha - \theta_0) \qquad 0 < \alpha - \theta_0 < \pi$$

where P_0 is the peak load intensity. The main direction of the load is defined by θ_0, the angle from the negative y-axis. The direction of the load is given in a local coordinate system controlled by a parameter `theta0`. The type of load distribution is shown in Figure 2:

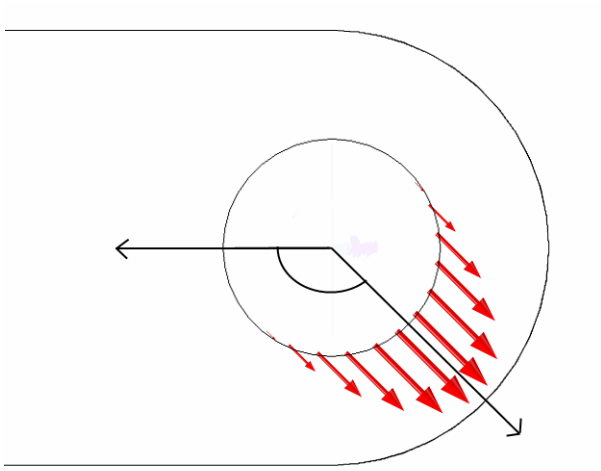

Figure 2: Load distribution applied to the bracket arms..

In this study, the load will be pointing along the negative y-axis only.

Results

Figure 3 shows the von Mises stress distribution together with an exaggerated (automatically scaled) picture of the deformation. As expected, the high stress values are located around the holes and in the vicinity of the mounting bolts. The maximum von Mises stress remains below the yield stress value for structural steel which validates the choice of a linear elastic material to analyze this structure.

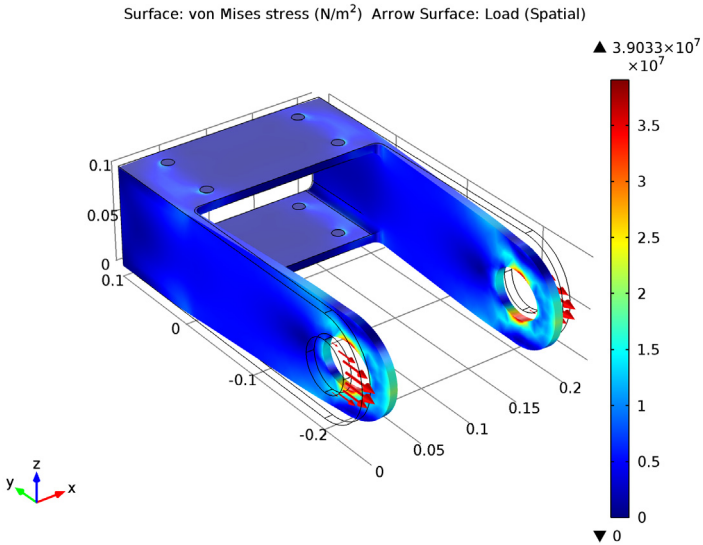

Figure 3: Von Mises stress distribution in the bracket under tensile load in y-axis direction.

In Figure 4 you can see that the bracket base remains fixed while only the arms are deformed. The maximum total displacement is about 27 µm, which is in agreement with the assumption of small deformations.

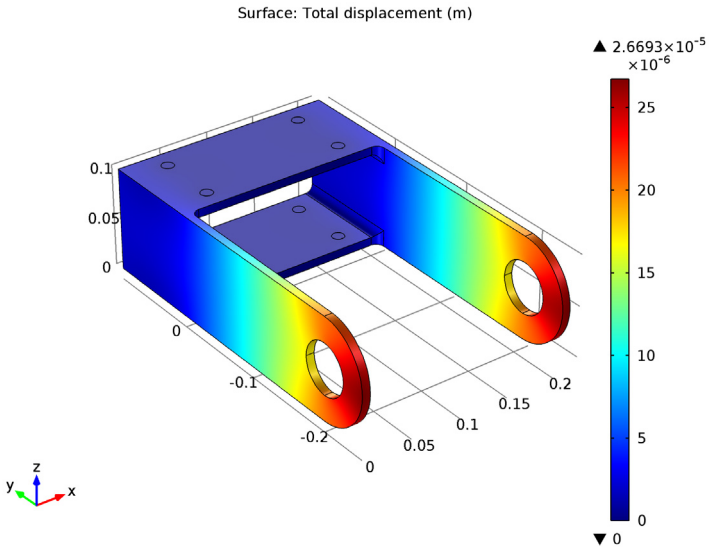

Figure 4: Bracket deformation under tensile load in y-axis direction.

Figure 5 shows the principal stresses in the bracket. As the load is oriented along the negative y direction, the principal stress plot shows tensile stress in the arm of the bracket.

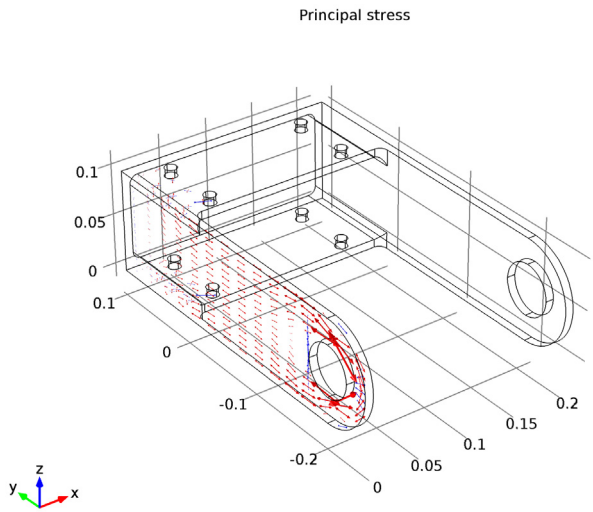

Figure 5: Principal stress in the bracket left arm.

The total reaction force in the load direction (y) is close to the 8 kN applied as load. Along the x and z directions the values are zero except for small numerical errors.

Model Library path: `Structural_Mechanics_Module/Tutorial_Models/bracket_static`

Modeling Instructions

From the **File** menu, choose **New**.

NEW

1 In the **New** window, click the **Model Wizard** button.

MODEL WIZARD

The first step to build a model is to open COMSOL and then specify the type of analysis you want to do in this case, a stationary, solid mechanics analysis.

1 In the **Model Wizard** window, click the **3D** button.

2 In the **Select physics** tree, select **Structural Mechanics>Solid Mechanics**.

3 Click the **Add** button.

4 Click the **Study** button.

5 In the tree, select **Preset Studies>Stationary**.

6 Click the **Done** button.

GLOBAL DEFINITIONS

It is good modeling practice to gather the constants and parameters in one place so that you can change and vary them easily. In this model, the parameter set includes `theta0`, the angle with which the maximum pressure from the pin is applied to the holes, a parameter you may want to vary later on. In general, these constants and parameters are valid throughout the model, and are therefore denoted as global parameters. These parameters are defined: the load orientation angle `theta0`, the maximum load value `P0`, and the y- and z-coordinate of the center of the bracket holes `y0` and `z0`.

Parameters

1 On the **Home** toolbar, click **Parameters**.

2 In the **Parameters** settings window, locate the **Parameters** section.

3 In the table, enter the following settings:

Name	Expression	Value	Description
theta0	180[deg]	3.142 rad	Direction of load
P0	1e7[Pa]	1.000E7 Pa	Peak load intensity
y0	-200[mm]	-0.2000 m	Y center of hole
z0	50[mm]	0.05000 m	Z center of hole

GEOMETRY 1

The next step is to create your geometry, which also can be imported from an external program. COMSOL Multiphysics supports a multitude of CAD programs and file formats. In this example, import a file in the COMSOL Multiphysics geometry file format (.mphbin). The file contains the assembly of both the bracket and mounting bolts.

Import 1

1 On the **Home** toolbar, click **Import**.

2 In the **Import** settings window, locate the **Import** section.

3 From the **Geometry import** list, choose **COMSOL Multiphysics file**.

4 Click the **Browse** button.

5 Browse to the model's Model Library folder and double-click the file `bracket.mphbin`.

6 Click the **Import** button.

Form Union

By using the default setting, **Form a union**, the mounting bolts are automatically bonded to the bracket and the internal boundary assumes continuity. If **Form an assembly** is selected instead, the mounting bolts would not be connected to the bracket, and the structural contact between the bolts and the bracket could be modeled.

1 In the **Model Builder** window, under **Component 1 >Geometry 1** right-click **Form Union** and choose **Build Selected**.

DEFINITIONS

Independent of whether the model is treated as a single entity or as an assembly, you still may need to access different parts of it for definitions such as multiple specifications of similar boundary conditions or solid domain specifications. The use of arbitrary box selections is one way to do this. In this example, one selection contains the bolt domains, while a second selection contains the area around the load-bearing boundaries of the holes. The box selection is independent of the geometry, and allows you to change the geometry topology while still keeping the desired selection.

Box 1

1 On the **Definitions** toolbar, click **Box**.

2 In the **Box** settings window, locate the **Box Limits** section.

3 In the **x minimum** edit field, type `0`.

4 In the **x maximum** edit field, type `0.2`.

5 In the **y minimum** edit field, type `0`.

6 In the **y maximum** edit field, type `0.1`.

7 In the **z minimum** edit field, type `0`.

8 In the **z maximum** edit field, type `0.11`.

9 Locate the **Output Entities** section. From the **Include entity if** list, choose **Entity inside box**.

10 Click the **Wireframe Rendering** button on the Graphics toolbar.

Box 2

1 On the **Definitions** toolbar, click **Box**.

2 In the **Box** settings window, locate the **Geometric Entity Level** section.

3 From the **Level** list, choose **Boundary**.

4 Locate the **Box Limits** section. In the **x minimum** edit field, type `-0.01`.

5 In the **x maximum** edit field, type `0.22`.

6 In the **y minimum** edit field, type `-0.23`.

7 In the **y maximum** edit field, type `-0.17`.

8 In the **z minimum** edit field, type `0.02`.

9 In the **z maximum** edit field, type `0.08`.

10 Locate the **Output Entities** section. From the **Include entity if** list, choose **Entity inside box**.

Here, you want to define expressions for the load applied to the load-carrying holes by first evaluating the radial angle based on the position along the global z-coordinate. Using a sinusoidal function, the second expression is then defined by the pressure distribution.

Variables 1

1 In the **Model Builder** window, right-click **Definitions** and choose **Variables**.

2 In the **Variables** settings window, locate the **Variables** section.

3 In the table, enter the following settings:

Name	Expression	Unit	Description
`angle`	`atan2((y-y0),(z-z0))`	rad	
`loadIntensity`	`P0*sin(angle-theta0)*(sin(angle-theta0)>0)`	Pa	

Rotated System 2 (sys2)

1 On the **Definitions** toolbar, click **Coordinate Systems** and choose **Rotated System**.

2 In the **Rotated System** settings window, locate the **Settings** section.

3 Find the **Euler angles (Z-X-Z)** subsection. In the β edit field, type `-theta0`.

MATERIALS

COMSOL Multiphysics is equipped with built-in material properties for a number of common materials. Here, choose structural steel as the material for both the bracket and the bolts. The material is automatically assigned to all domains.

1 On the **Home** toolbar, click **Add Material**.

ADD MATERIAL

1 Go to the **Add Material** window.

2 In the tree, select **Built-In>Structural steel**.

3 In the **Add material** window, click **Add to Component**.

4 On the **Home** toolbar, click **Add Material** to hide the **Add Material** window.

SOLID MECHANICS

Now define the physics for the bracket assembly. Initially, the analysis was specified to be stationary using the classical equations associated with solid mechanics. In this step, you are more specific concerning the different modeling domains.

By default, the Solid Mechanics interface assumes that the participating material models are linear elastic, which is appropriate for this example. All that is left to do is to set the constraints and loads acting on the structure, making use of the box selections defined previously

Fixed Constraint 1

1 On the **Physics** toolbar, click **Domains** and choose **Fixed Constraint**.

Assume that the bolts are rigid and that the displacements are perfectly constrained.

2 In the **Fixed Constraint** settings window, locate the **Domain Selection** section.

3 From the **Selection** list, choose **Box 1**.

Boundary Load 1

1 On the **Physics** toolbar, click **Boundaries** and choose **Boundary Load**.

Apply a boundary load to the bracket holes.

2 In the **Boundary Load** settings window, locate the **Boundary Selection** section.

3 From the **Selection** list, choose **Box 2**.

4 Locate the **Coordinate System Selection** section. From the **Coordinate system** list, choose **Rotated System 2 (sys2)**.

Use the rotated coordinate system to have the load orientation change with a value of `theta0`.

5 Locate the **Force** section. Specify the $\mathbf{F}_A$ vector as

0	x1

`loadIntensity`	x2
0	x3

STUDY 1

The Study node automatically defines a solver sequence for the simulation based on the selected physics (solid mechanics) and study type (stationary). Since a mesh is required, and it has not been created yet, the Study node automatically generates this at the same time as the solver sequence.

1 On the **Home** toolbar, click **Compute**.

RESULTS

Stress (solid)

1 In the **Model Builder** window, under **Results** right-click **Stress (solid)** and choose **Arrow Surface**.

The default plot shows the von Mises stress in the bracket, add an arrow plot to this plot group to display the applied load.

2 In the **Arrow Surface** settings window, locate the **Expression** section.

3 Click **Replace Expression** in the upper-right corner of the **Expression** section. From the menu, choose **Solid Mechanics>Load (Spatial) (solid.FperAreax,...,solid.FperAreaz)**.

4 Locate the **Coloring and Style** section. In the **Number of arrows** edit field, type `3000`.

5 On the *Stress (solid)* toolbar, click **Plot**.

3D Plot Group 2

1 On the **Home** toolbar, click **Add Plot Group** and choose **3D Plot Group** to add a plot group to display the displacement of the bracket.

2 In the **Model Builder** window, under **Results** right-click **3D Plot Group 2** and choose **Surface**.

3 On the **3D Plot Group 2** toolbar, click **Plot**.

3D Plot Group 3

1 On the **Home** toolbar, click **Add Plot Group** and choose **3D Plot Group** to create another plot to display the principal stresses in the bracket.

2 On the **3D Plot Group 3** toolbar, click **More Plots** and choose **Principal Stress Volume**.

3 In the **Principal Stress Volume** settings window, locate the **Positioning** section.

4 Locate the **Z grid points** subsection. From the **Entry method** list, choose **Coordinates**.

5 In the **Coordinates** edit field, type `4e-3 15e-3 30e-3 1e-2`.

6 Locate the **Y grid points** subsection. In the **Points** edit field, type `15`.

7 Locate the **Z grid points** subsection. In the **Points** edit field, type `15`.

8 Locate the **Coloring and Style** section. Select the **Scale factor** check box.

9 In the associated edit field, type `1.5e-9`.

10 On the **3D Plot Group 3** toolbar, click **Plot**.

Derived Values

A final check is to compute the total reaction force along the x, y, and z directions. Because the mounting bolts are fully constrained, use a volume integration over the constrained domains.

1 On the **Results** toolbar, click **More Derived Values** and choose **Integration>Volume Integration**.

2 In the **Volume Integration** settings window, locate the **Selection** section.

3 From the **Selection** list, choose **Box 1**.

4 Locate the **Expression** section. Click **Replace Expression** in the upper-right corner of the **Expression** section. From the menu, choose **Solid Mechanics>Reactions>Reaction Force (Spatial)>Reaction force, x component (solid.RFx)**. Click the **Evaluate** button.

5 In the **Volume Integration** settings window, locate the **Expression** section.

6 Click **Replace Expression** in the upper-right corner of the **Expression** section. From the menu, choose **Solid Mechanics>Reactions>Reaction Force (Spatial)>Reaction force, y component (solid.RFy)**. Click the **Evaluate** button.

7 Click **Replace Expression** in the upper-right corner of the **Expression** section. From the menu, choose **Solid Mechanics>Reactions>Reaction Force (Spatial)>Reaction force, z component (solid.RFz)**. Click the **Evaluate** button.